FISHER & PAYKEL

606L SERIES 7 QUAD DOOR REFRIGERATOR FREEZER THROUGH DOOR ICE & WATER

27023-A RF620QNTVD1

SPARE PART GUIDE

AA

INTRODUCTION

Voltage

220 –240 50Hz

Kit parts

Where a part number is shown against the descriptions for kit components, they are also available as separate items. In addition, some parts may be supplied with these kits that are not available as separate items, and are therefore either not listed, or a part number is not shown against the part description in this guide.

Part list key

You may see one or more 'keys' in the first column of the part list tables, see below for explanations:

NI	Indicates the part is not illustrated in the diagram.
NOT USED	Indicates the diagram part is not used in this manual.
NS	Indicates the part is not servicable.
NM	Not available for this model.

For more information about our products and services, and for detailed contact information, visit our website:

NZ https://www.fisherpaykel.co.nz
AU https://www.fisherpaykel.com.au

CONTENTS

DOOR COMPONENTS	3
INTERNAL CABINET COMPONENTS	9
DUCT COMPONENTS	13
EXTERNAL CABINET COMPONENTS	17
TERMINAL, PLUGS & SOCKETS	21
REAR CABINET COMPONENTS	23

DOOR COMPONENTS

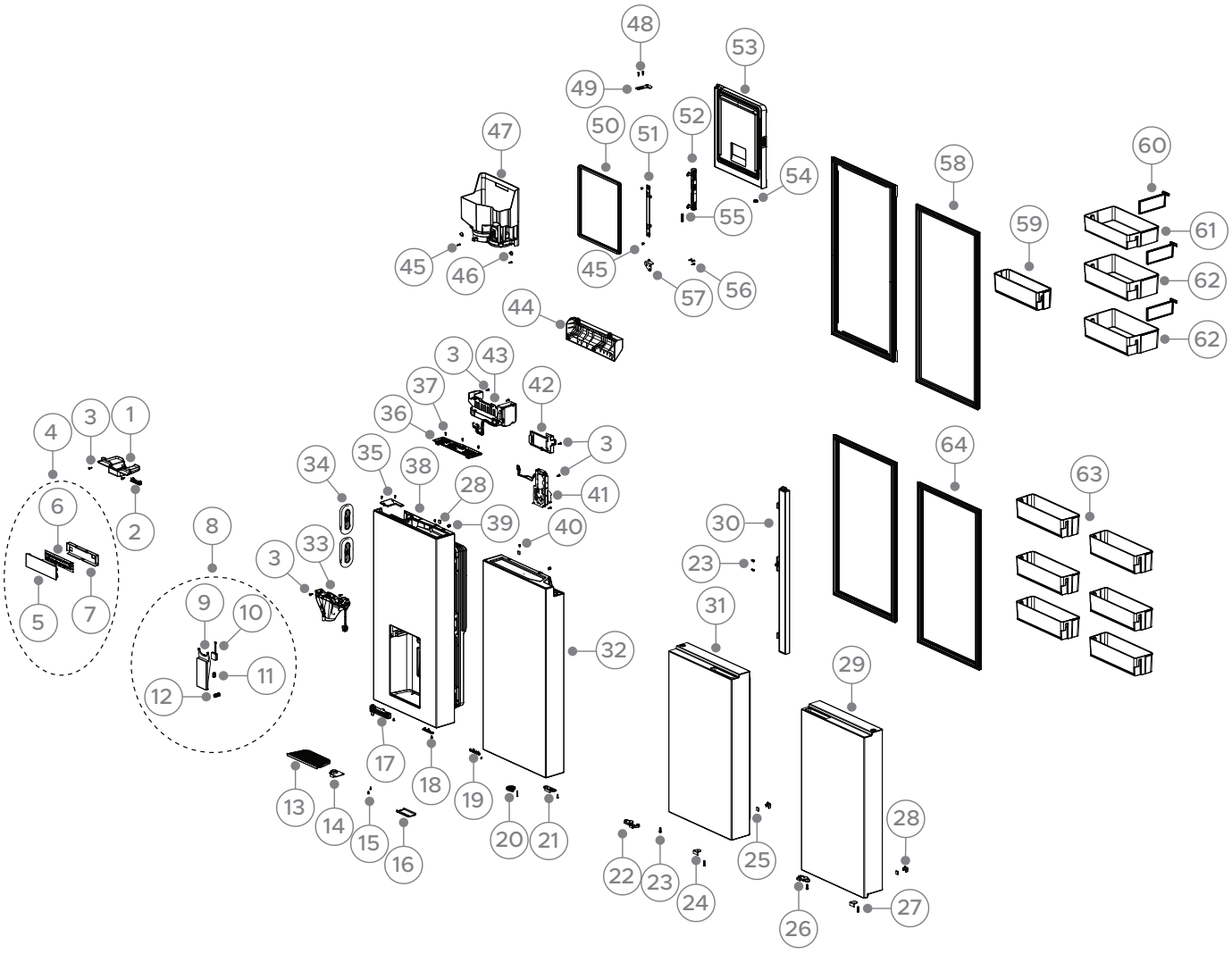

DOOR COMPONENTS

PART	PART NUMBER	PART DESCRIPTION
1	**H0060888572A**	DISPENSER TOP COVER ASSY
2	**H0060888653**	LIGHT DISPLAY IW RF620
3	**H0064098068**	SCREW PHILIPS SELF TAPPING
4	**H0060887920A**	MOD DISP EXT SS TDIW
	INCLUDES H0060887917A	FASCIA EXT BK TDIW
	INCLUDES H0061801534A	DISPLAY BOARD PCBA
	INCLUDES H0060269738	HOUSING DISP EXT TDIW
5	**H0060887917A**	FASCIA EXT BK TDIW
6	**H0061801534A**	DISPLAY BOARD PCBA
7	**H0060269738**	HOUSING DISP EXT TDIW
8	**H0060888568A**	PADDLE BLACK ASSY
	INCLUDES H0060269908A	PADDLE BLACK
	INCLUDES H0064003091	MOTION SENSOR
	INCLUDES H0064002360	SWICTCH MICRO
	INCLUDES H0060124430	PADDLE SPRING
9	**H0060269908A**	PADDLE BLACK
10	**H0064003091**	MOTION SENSOR
11	**H0064002360**	SWICTCH MICRO
12	**H0060124430**	PADDLE SPRING
13	**H0060271588A**	DRIP TRAY BLACK ASSY
14	**H0060240823**	STOPPER DOOR
15	**H0060801032**	SCREW
16	**H0060251720A**	CLOSER LID DOOR SATINA
17	**H0060858884A**	CLOSER DOOR
18	**H0010600332**	SCREW
19	**H0060858426A**	LAMP FREEZER
20	**H0060247184**	CLOSING HOOK
21	**H0060114905B**	DOOR STOP RH
NI	**H0060219812**	BEARING DOOR FC
22	**H0060242209**	HOOK CLOSING BLACK
23	**H0060802013**	SCREW
24	**H0060117465**	DOOR STOP
25	**H0060301585**	DOOR MAGNET
26	**H0060229662B**	CLOSING HOOK VTZ RH

DOOR COMPONENTS

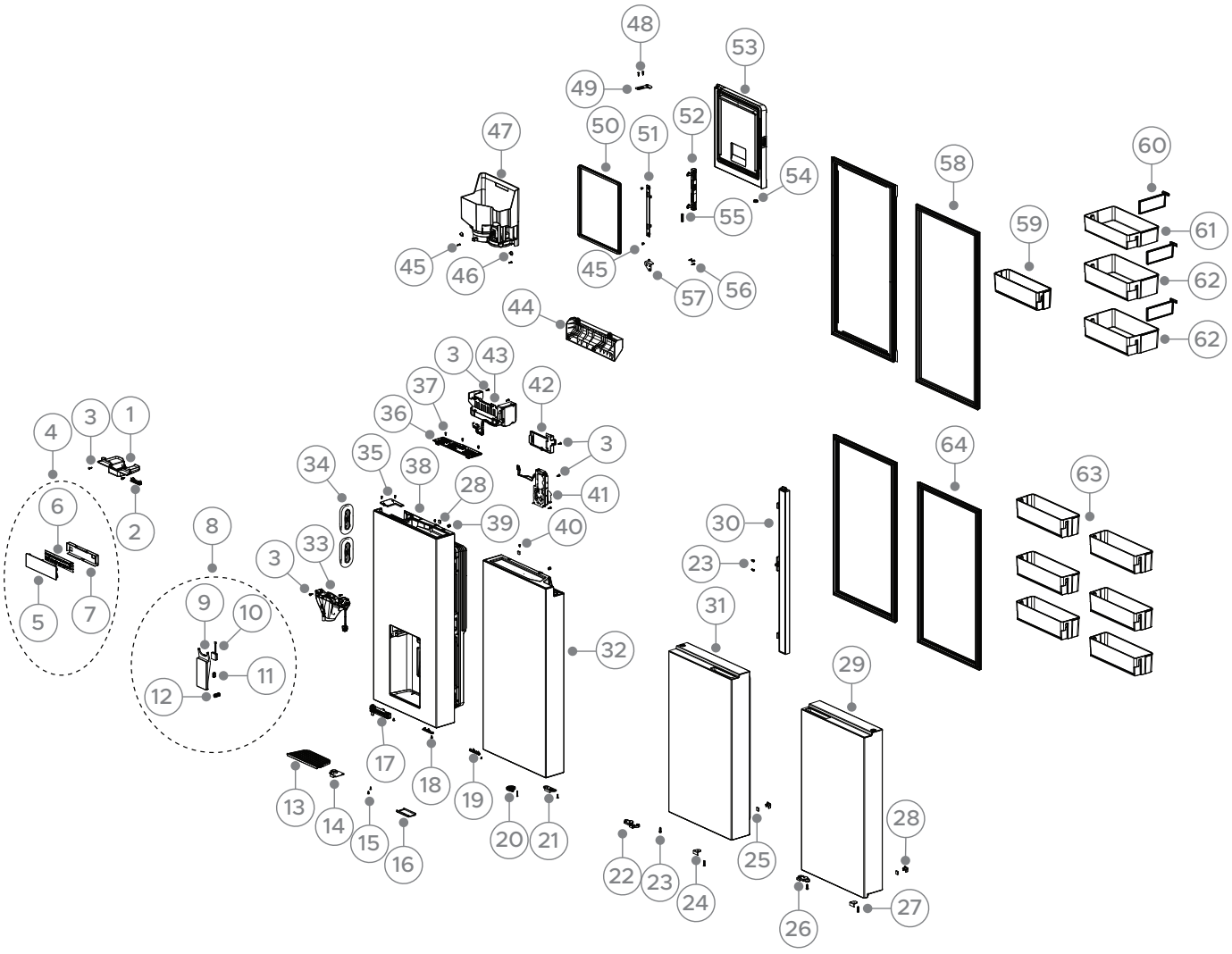

DWG 007544

DOOR COMPONENTS

PART	PART NUMBER	PART DESCRIPTION
27	H004HR49G05R	SCREW (CLOSING HOOK)
28	H0060242169	COVER MAGNET
29	H0060886947A	DOOR VTZ BLACK
30	H0060858473B	FLAPPER ASSY BLACK
31	H0060886946A	DOOR FC BLACK
32	H0060886945A	DOOR PC RH BLACK
33	H0060870466B	SPIGOT WATER DISPENSER
34	H0060252045	DUCT SEALING
35	H0060251724	COVER ENDCAP TOP LH BLACK
36	H0060871570G	BOARD CONTROL IM ASSY BLACK
37	H0064082855	SCREW CROSS GROOVE SELF ATTACH
38	H0060886948A	DOOR PC LH BLACK
39	H0060230608E	STOPPER DOOR SCREW-ON
40	H0060600186	SCREW FLAPPER
41	H0064002117C	MOTOR ICE CRUSHER
42	H0060251577	BOX TERMINAL IM
43	H0060864717	ICEMAKER ASSY
44	H0060269739	COVER DOOR LINER
45	H0064098047	SCREW
46	H00602160304K	CAP SCREW WHITE
47	H0060870465	BIN ICE
48	H0000600012B	SCREW ICE BOX DOOR
49	H0060124787	HINGE IM TOP
50	H0060252051	GASKET DOOR IM
51	H0060251845	HOOK LID LATCH
52	H0060251844	HOUSING LID LATCH
53	H0060868430B	DOOR IM ASSY
54	H0060223701	STOPPER
55	H0060600074	SPRING COMPRESSION
56	H0000600012B	SCREW ICE BOX HINGE
57	H0060124876	HINGE IM BTM
58	H0060825978AR	GASKET PC BLACK
59	H0060269919	SHELF DOOR NARROW
60	H0060269918	DIVIDER SHELF
61	H0060269712	SHELF DOOR WIDE

DOOR COMPONENTS

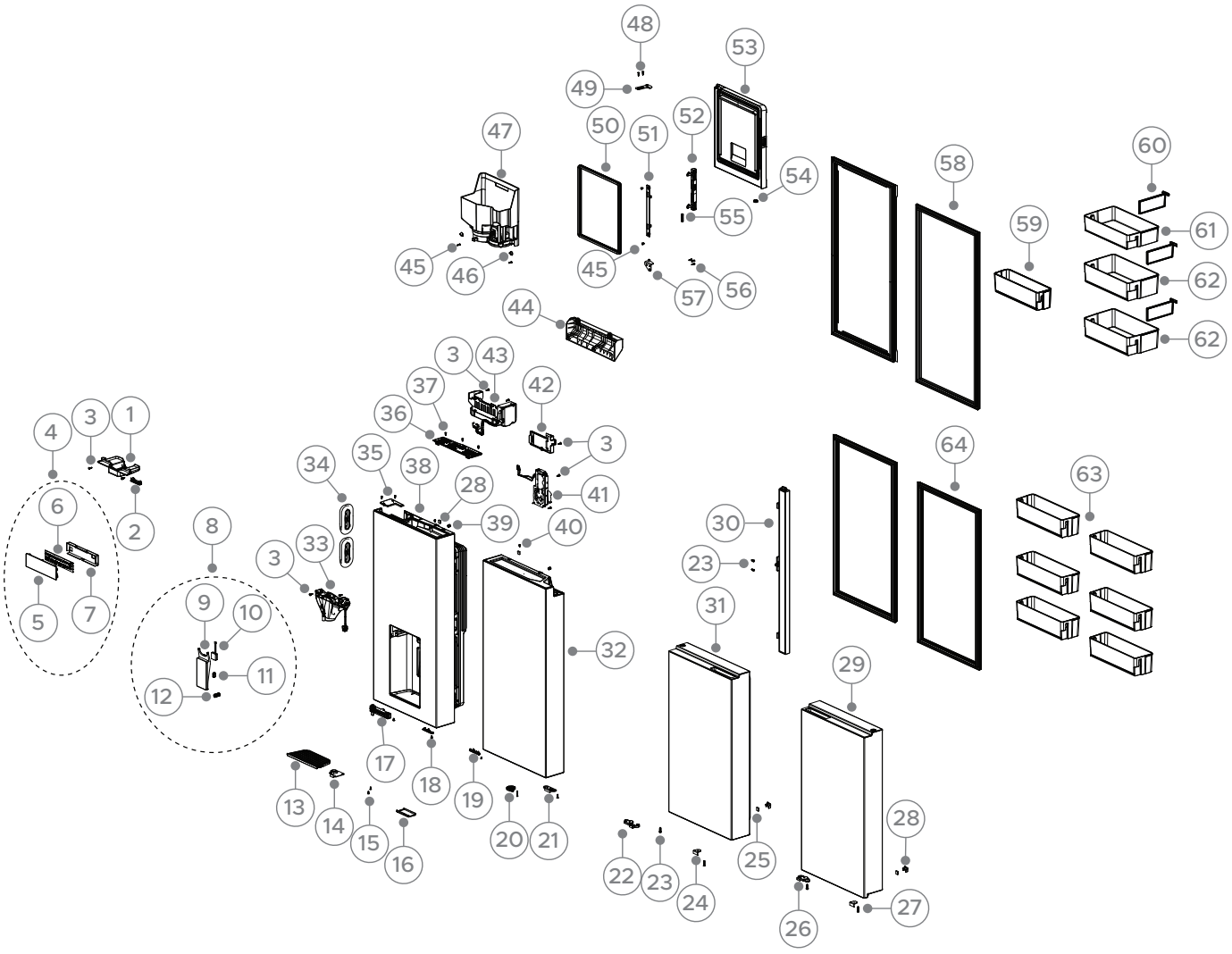

DWG 007544

DOOR COMPONENTS

PART	PART NUMBER	PART DESCRIPTION
62	H0060269716	SHELF DOOR GALLON
63	H0060269719	SHELF DOOR FC/VTZ
64	H0060825978AS	GASKET FC BLACK
NI	H0060129369	SPANNER DOOR ADJUSTMENT

INTERNAL CABINET COMPONENTS

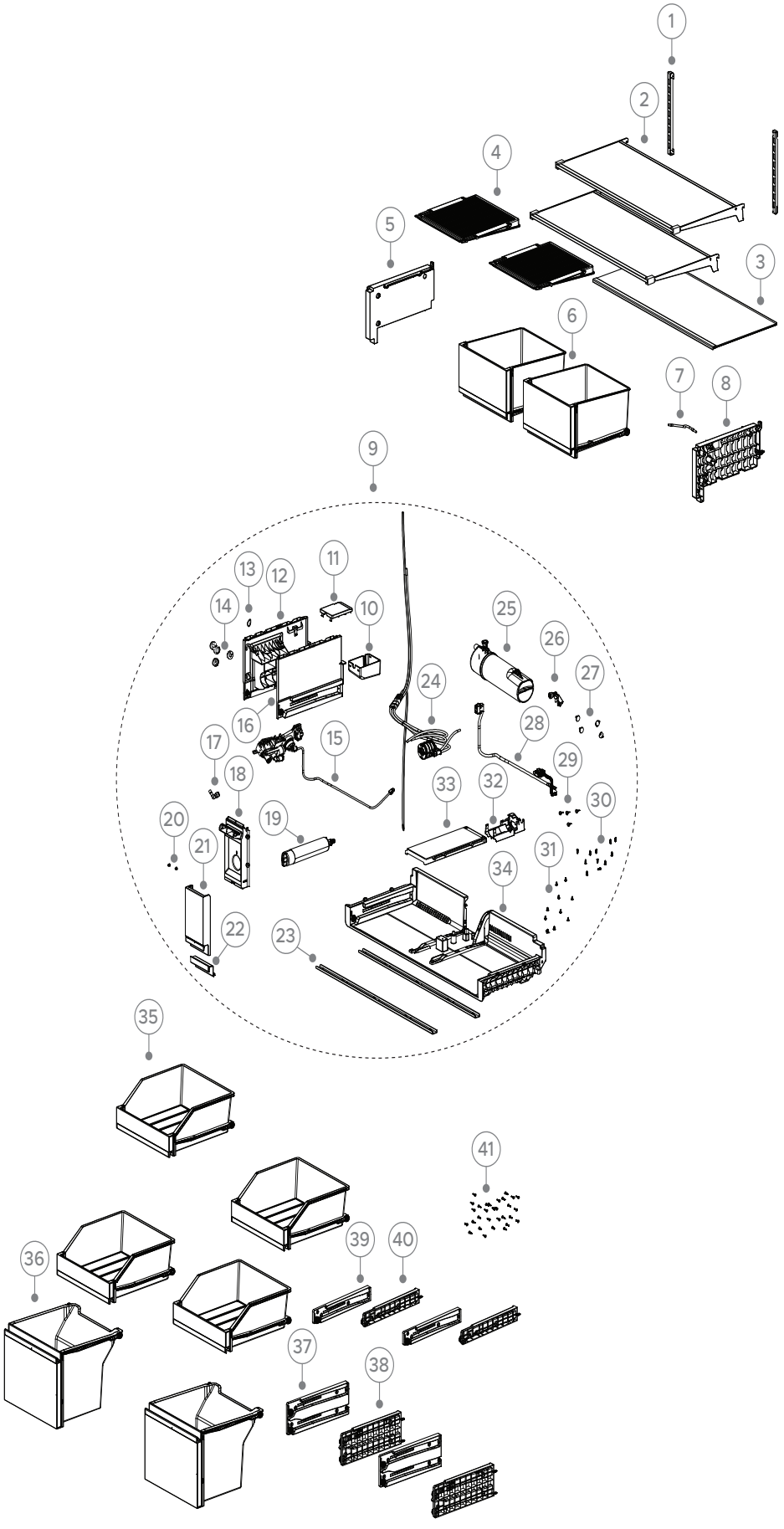

DWG 007545

INTERNAL CABINET COMPONENTS

PART	PART NUMBER	PART DESCRIPTION
1	**H0060130504**	BRACKET SHELF CANTILEVER
2	**H0060869655A**	SHELF CANTILEVER
3	**H0060869658C**	SHELF RETAINER LID CRISPER BIN
4	**H0060269046**	HUMIDITY CONTROL LID
5	**H0060269052**	SUPPORT RETAINER SHELF LH
6	**H0060886578**	DRAWER PC
7	**H0060271728**	PIPE WATER
8	**H0060269052A**	SUPPORT RETAINER SHELF RH
9	**H0060886576A**	BRACKET FILTER MODULE ASSY
	INCLUDES H0060236202H	BASE WATER FILTER
	INCLUDES H0060269768	COVER TERMINAL BOX
	INCLUDES H0060269767	TERMINAL BOX
	INCLUDES H0060269062	BRACKET MID SLIDE LH PC
	INCLUDES H0060201200	CAPILLARY TUBE BRACKET
	INCLUDES H0060230195	WHEEL
	INCLUDES H0060269063	BRACKET MID SLIDE RH PC
	INCLUDES H0064002382A	WATER VALVE
	INCLUDES 847200	FILTER WATER REF FWC3
	INCLUDES H0060247755	CONNECTOR WATER PIPE
	INCLUDES H0060269065	LID FILTER
	INCLUDES H0060255461	SPACER RUBBER
	INCLUDES H0060269054	COVER FILTER FRONT
	INCLUDES H0060138109A	COVER FILTER FRONT-ALUMINIUM
	INCLUDES H0060883607	TANK WATER
	INCLUDES H0060269831	JOINT ASSEMBLY
	INCLUDES H00602160304K	CAP SCREW WHITE
	INCLUDES H0060405869	VALVE WATER CONNECTION LINE
	INCLUDES H0060220008	NAIL RUBBER
	INCLUDES H0060853565	FILTER BRACKET WATER
	INCLUDES H0060251650A	COVER FILTER TOP
	INCLUDES H0064098047	SCREW
	INCLUDES H0060269059	BIN CARRIER ASSY
	H0060600185 INCLUDES	SCREW
	INCLUDES H0060128564	RAIL STIFFENING BASE

INTERNAL CABINET COMPONENTS

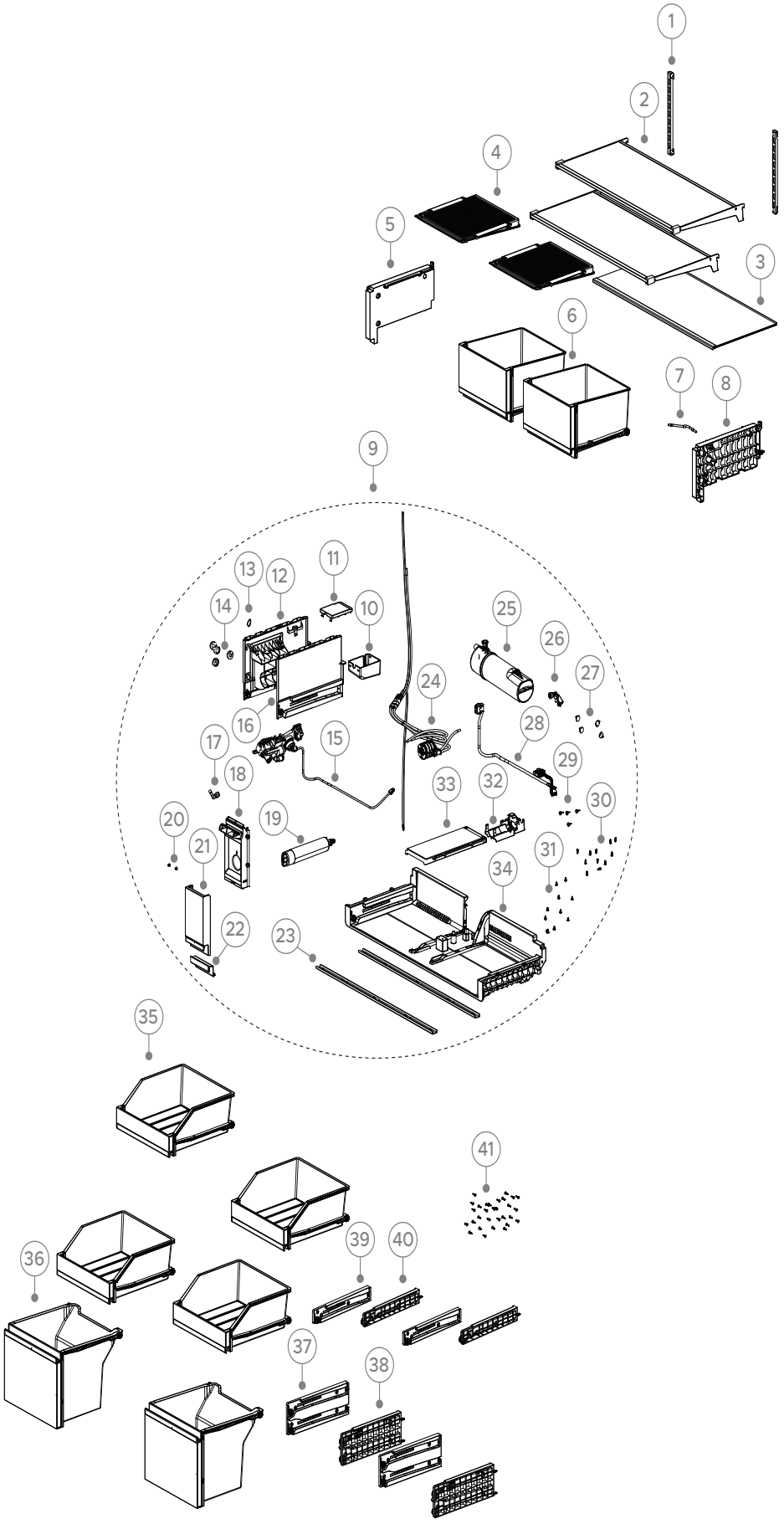

DWG 007545

INTERNAL CABINET COMPONENTS

PART	PART NUMBER	PART DESCRIPTION
10	H0060269767	TERMINAL BOX
11	H0060269768	COVER TERMINAL BOX
12	H0060269062	BRACKET MID SLIDE LH PC
13	H0060201200	CAPILLARY TUBE BRACKET
14	H0060230195	WHEEL
15	H0064002382A	WATER VALVE
16	H0060269063	BRACKET MID SLIDE RH PC
17	H0060247755	CONNECTOR WATER PIPE
18	H0060269065	LID FILTER
19	847200	FILTER WATER REF FWC3
20	H0060255461	SPACER RUBBER
21	H0060269054	COVER FRONT FILTER
22	H0060138109A	COVER FILTER FRONT-ALUMINIUM
23	H0060128564	RAIL STIFFENING BASE
24	H0060236202H	BASE WATER FILTER
25	H0060883607	TANK WATER
26	H0060269831	JOINT ASSEMBLY
27	H00602160304K	CAP SCREW WHITE
28	H0060405869	VALVE WATER CONNECTION LINE
29	H0060220008	NAIL RUBBER
30	H0064098047	SCREW
31	H0060600185	SCREW
32	H0060853565	FILTER BRACKET WATER
33	H0060251650A	COVER FILTER TOP
34	H0060269059	BIN CARRIER ASSY
35	H0060886580	TRAY FC ASSY
36	H0060886581	TRAY BTM DRAWER FC ASSY
37	H0060871605	SLIDE DRAWER LOWER FC LH
38	H0060871605A	SLIDE DRAWER LOWER FC RH
39	H0060871606	SLIDE TRAY ASSY FC LH
40	H0060871606A	SLIDE TRAY ASSY FC RH
41	H0060600097	SCREW

DUCT COMPONENTS

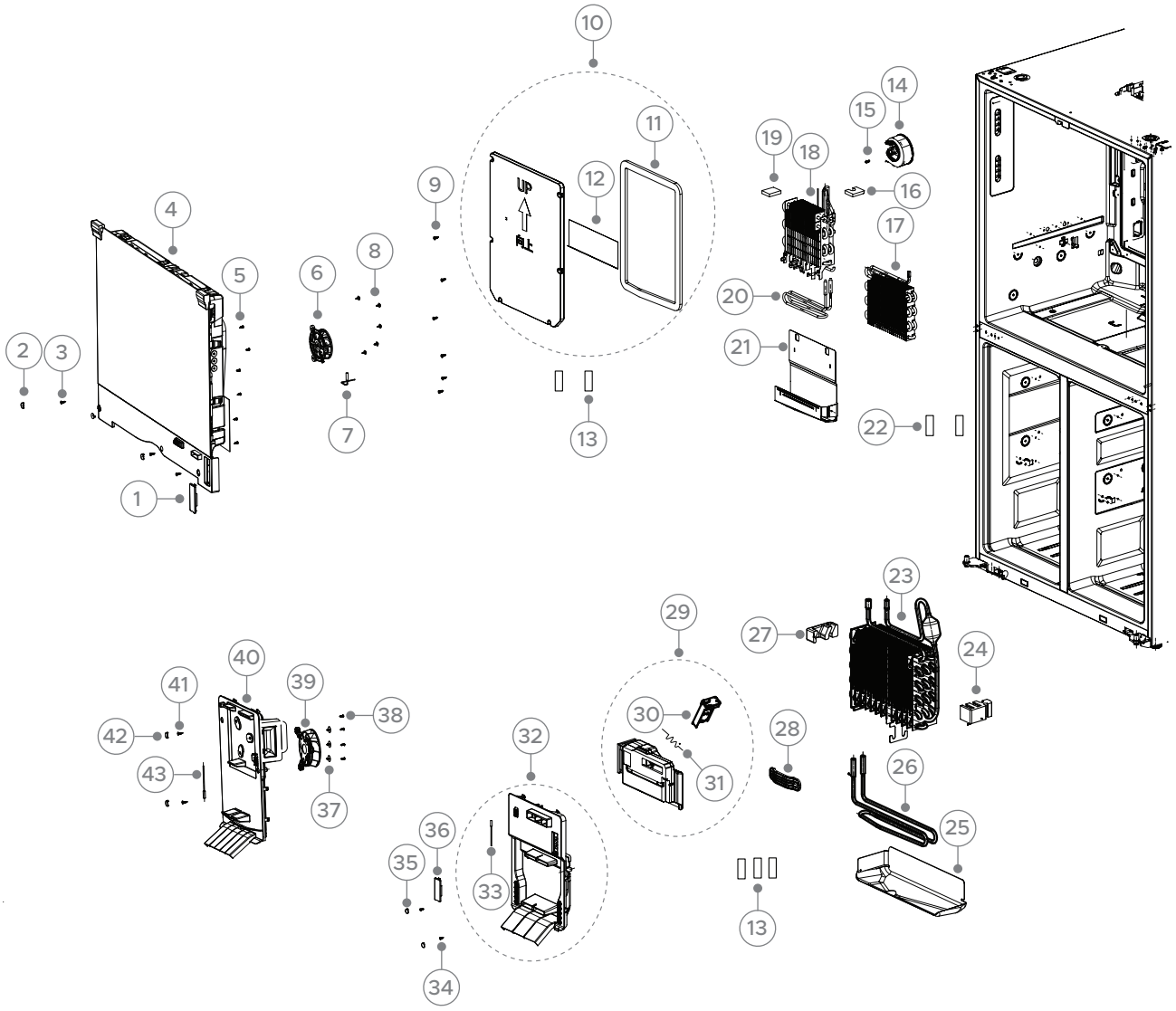

DWG 007546

DUCT COMPONENTS

PART	PART NUMBER	PART DESCRIPTION
1	**H0060222026**	FREEZER AIRFLOW DUCT CABLE COV
2	**H00602160304K**	CAP SCREW WHITE
3	**H0060600097**	SCREW
4	**H0060886930**	DUCT PC ASSY
5	**H0060802008**	SCREW
6	**H0064001939B**	FAN PC FC 4 WIRE
7	**H0060401425C**	SENSOR REF AMBIENT
8	**H0060600002**	SCREW
9	**H0060600343**	SCREW FAN
10	**H0060870722**	DOOR EVAP ASSY
	INCLUDES	DOOR
	INCLUDES H0060312440	FOIL
	INCLUDES H0060312439	GASKET DOOR EVAP ICEMAKER
11	**H0060312439**	GASKET DOOR EVAP ICEMAKER
12	**H0060312440**	FOIL
13	**H0064000025**	SENSOR TYPE B
14	**H0064002353B**	FAN COMPACT FRZ
15	**H0060600121**	SCREW
16	**H0060312687**	HOUSING EVAP IM RH
17	**H0060706047A**	EVAPORATOR PC
18	**H0060707428**	EVAPORATOR IM
19	**H0060312686**	HOUSING EVAP IM LH
20	**H0064002086A**	HEATER DEFROST IM
21	**H0060130502**	CONTAINER DRIP TRAY EVAP IM
22	**H0064000024**	SENSOR TYPE A
23	**H0060706905A**	EVAPORATOR FC
24	**H0060312685**	HOUSING EVAPORATOR RH
25	**H0060130503**	TRAY DRIP EVAP FC
26	**H0064002027**	HEATER DEFROST FC
27	**H0060312688**	HOUSING EVAPORATOR LH
28	**H0060241552**	COVER PIPE SUCTION
29	**H0060871304**	COVER AIR DUCT UPPR SWITCHZONE
	INCLUDES	COVER
	INCLUDES H00609340017	DAMPER AIR
	INCLUDES H0060401766A	SENSOR TEMPERATURE

DUCT COMPONENTS

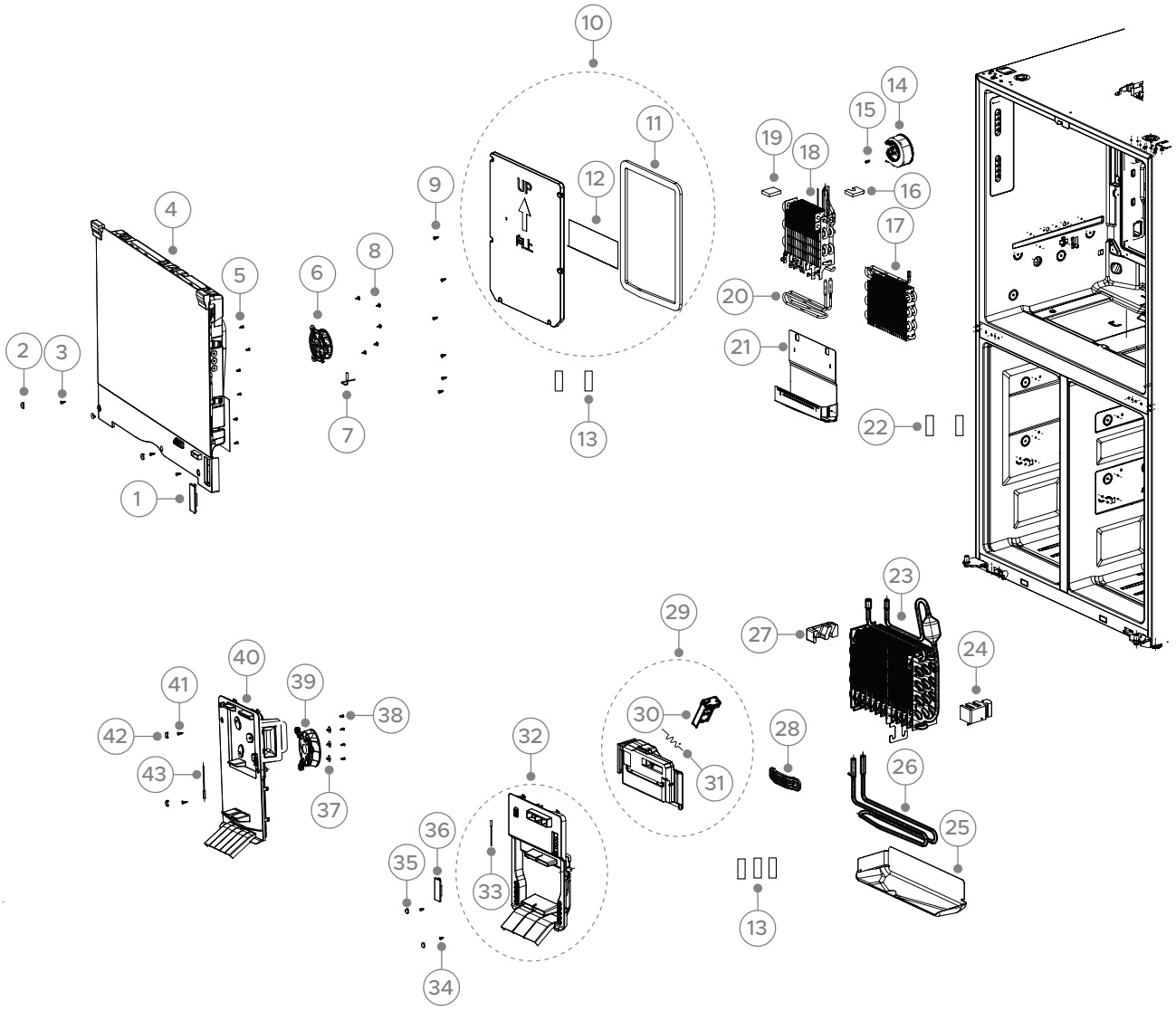

DWG 007546

DUCT COMPONENTS

PART	PART NUMBER	PART DESCRIPTION
30	H00609340017	DAMPER AIR
31	H0064002787	HEATER AUXILLARY DAMPER
32	H0060871305	COVER AIR DUCT LWR SWITCHZONE
	INCLUDES	COVER
	INCLUDES H0060401766A	SENSOR TEMPERATURE
33	H0060401766A	SENSOR TEMPERATURE
34	H0060600097	SCREW
35	H00602160304K	CAP SCREW WHITE
36	H0060222026	FREEZER AIRFLOW DUCT CABLE COV
37	H0064000025	SENSOR TYPE B
38	H0060802008	SCREW
39	H0064002766S	SHIELD FAN FRZ
40	H0060886836	FREEZER DUCT COVER ASSEMBLY
41	H0060600097	SCREW
42	H00602160304K	CAP SCREW WHITE
43	H0060402182A	CABLE SENSOR FREEZER

EXTERNAL CABINET COMPONENTS

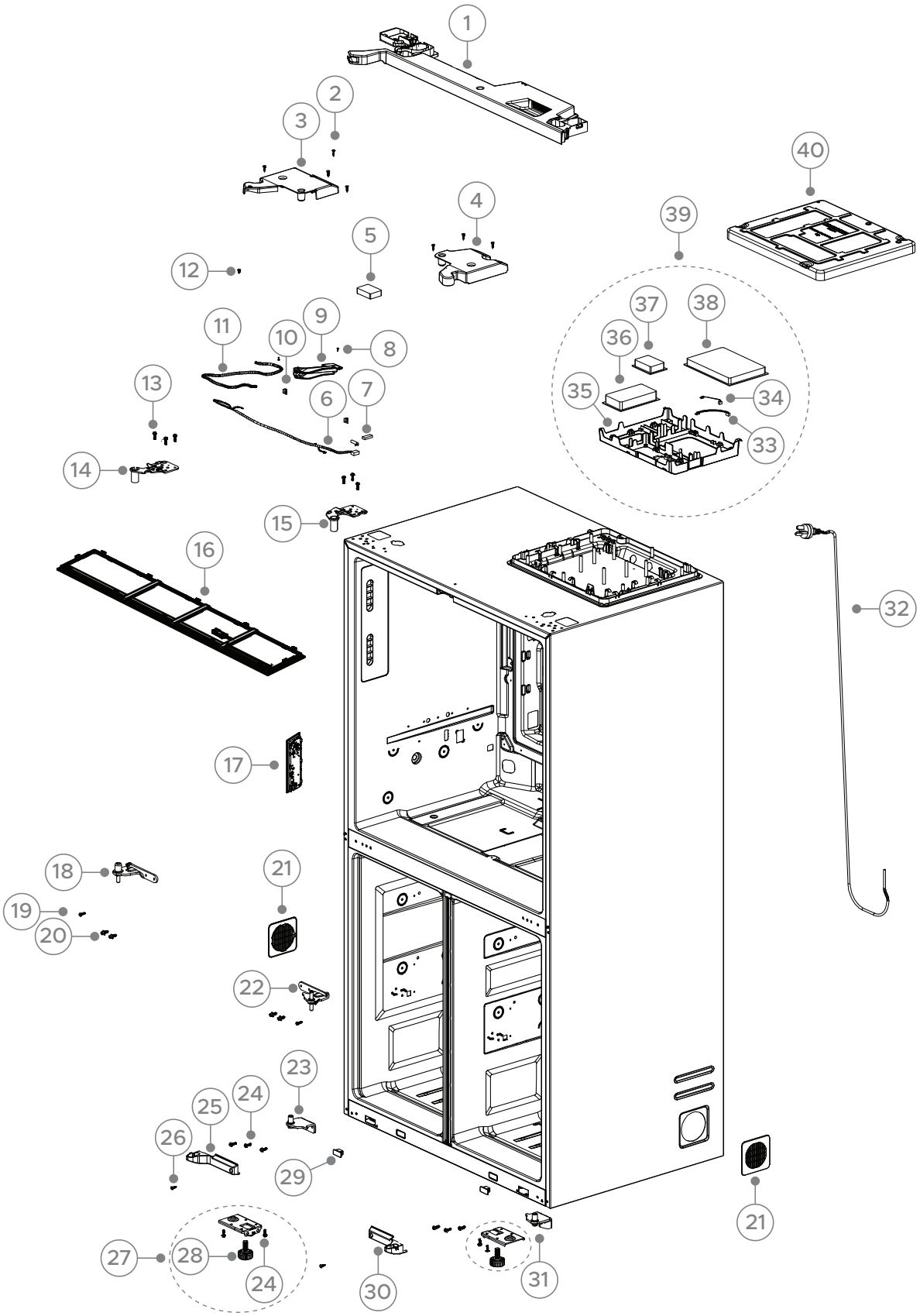

DWG 007547

EXTERNAL CABINET COMPONENTS

PART	PART NUMBER	PART DESCRIPTION
1	H0060871777	COVER HINGE TOP MID ASSY BLACK
2	H0060600097	SCREW
3	H0060872296	COVER HINGE TOP LH BLACK
4	H0060240800A	COVER HINGE RH BLACK
5	H0061801208	MODULAR WIFI
6	H0060404397B	CABLE COVER HINGE TOP
7	H0064002683	SENSOR HUMIDITY
8	H006-0040600024	SCREW ST29*9 65MN
9	H0060251785C	CABLE BOX FIXINGS
10	H0064001332	MAGNET SWITCH DOOR
11	H0060889189	CABLE ASSY
12	H0060600186	SCREW FLAPPER
13	H0060600017	SCREW
14	H0060116388A	HINGE TOP LH
15	H0060116389	HINGE PC TOP
16	H0064003283A	LIGHT CEILING PANEL
17	H0060887919	MOD TFT DISP INTERNAL
18	H0060125308A	HINGE MID LH
19	H0077010057	SCREW
20	H0060600165B	SCREW SIX ANGLE HEAD
21	H0060232956D	GRILLE BLACK
22	H0060125309D	HINGE MID RH
23	H0060124883A	HINGE BTM LH
24	H0060600017	SCREW
25	H0060241342	COVER HINGE BTM LH
26	H0060600097	SCREW
27	H0060859013	WHEEL ASSY FRONT
	INCLUDES H0060600017	SCREW
	INCLUDES H0060617132A	FOOT ADJUSTABLE
28	H0060617132A	FOOT ADJUSTABLE
29	H0064002286C	SENSOR HALL BLACK
30	H0060241343	COVER HINGE BTM RH
31	H0060124884A	HINGE BTM RH
32	H0060401749AH	CABLE POWER AU/NZ

EXTERNAL CABINET COMPONENTS

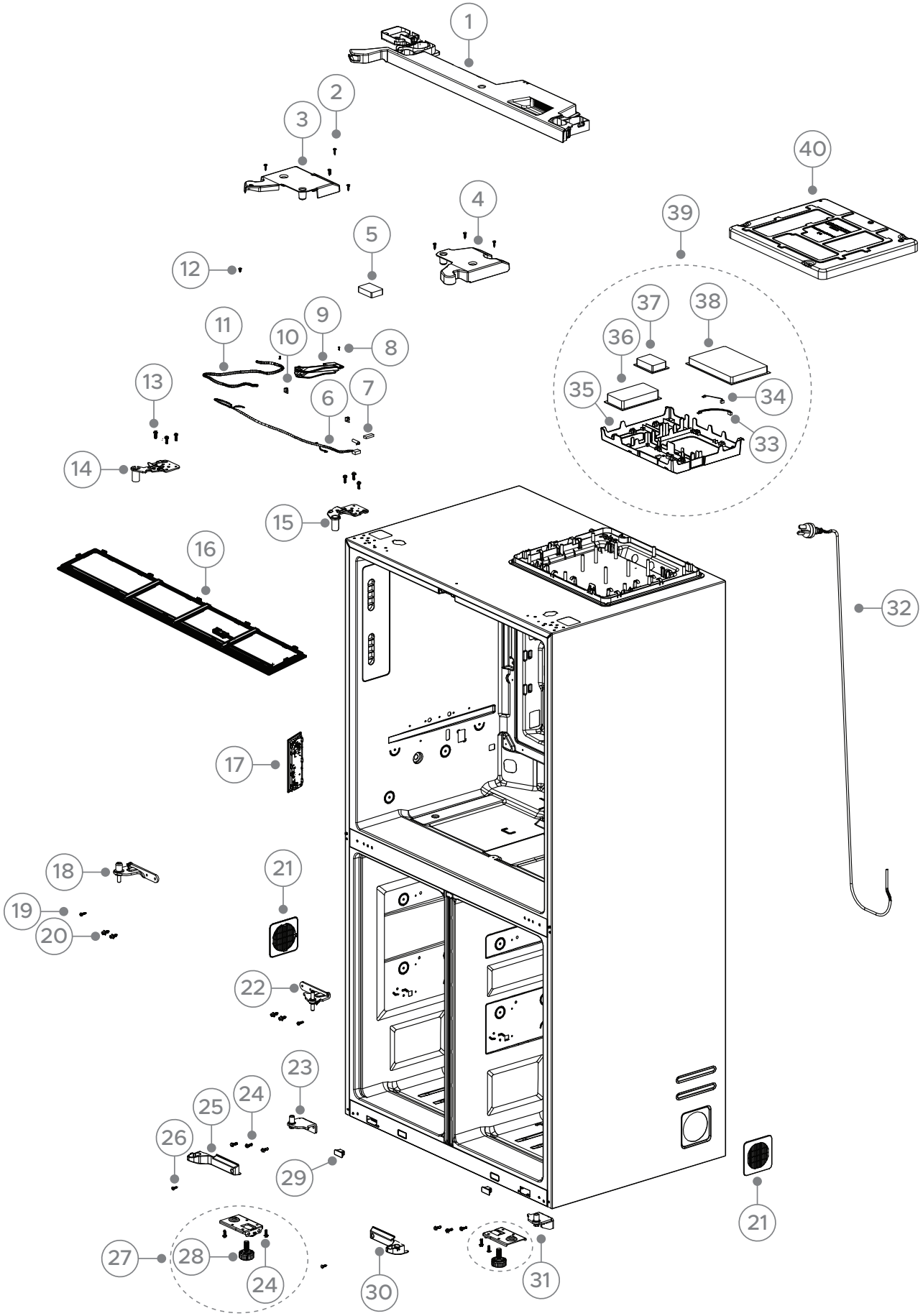

DWG 007547

EXTERNAL CABINET COMPONENTS

PART	PART NUMBER	PART DESCRIPTION
33	**H0060404400**	CABLE POWER 220V
34	**H0060404399D**	CABLE 12V
35	**H0060233826**	HOUSING CONTROLLER MAIN
36	**H0061800501**	BOARD POWER
37	**H0061800598B**	BOARD ELEC SOURCE FR4
38	**H0061801175Y**	BOARD CONTROL MAIN
39	**H0060866736AR**	BOARD CONTROL ASSY
	INCLUDES H0060404400	CABLE POWER 220V
	INCLUDES H0060404399D	CABLE 12V
	INCLUDES H0060233826	HOUSING CONTROLLER MAIN
	INCLUDES H0061800501	BOARD POWER
	INCLUDES H0061800598B	BOARD ELEC SOURCE FR4
	INCLUDES H0061801175Y	BOARD CONTROL MAIN
40	**H0060125087**	COVER CONTROLLER

1 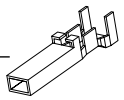 JST SOCKET TERMINAL

2 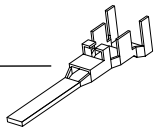 JST PIN TERMINAL

3 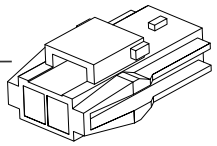 JST SOCKET

4 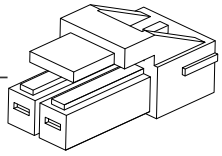 JST PLUG

5 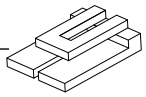 JST RETAINER

TERMINAL, PLUGS & SOCKETS

PART	PART NUMBER	PART DESCRIPTION	COMMENTS
1	819607P	TERMINAL SYF-01T PKT 10	26/20 AWG
	819608P	TERMINAL SYF-41T PKT 10	20/16 AWG
2	819609P	PIN/TERM SYM-01T PKT 10	26/20 AWG
	819610P	PIN/TERM SYM-41T PKT 10	20/16 AWG
3	819615	JST SOCKET 2PIN YLR-02V	
	819616	JST SOCKET 3PIN YLR-03V	
	819617	JST SOCKET 4PIN YLR-04V	
	819618	JST SOCKET 6PIN YLR-06VF	
	819619	JST SOCKET 8 PIN YLR-08V	
4	819611	JST PLUG 2PIN YLP-02V	
	819612	JST PLUG 4PIN YLP-04V	
	819613	JST PLUG 6PIN YLP-06V	
	819614	JST PLUG 8PIN YLP-08V	
5	819620	RETAINER 2 WAY YLS-02V	
	819621	RETAINER 3 WAY YLS-03V	
NI	150807	TERMINAL REMOVAL TOOL	
	855288	EXTRACTION TOO M ML AMP 1897271	

REAR CABINET COMPONENTS

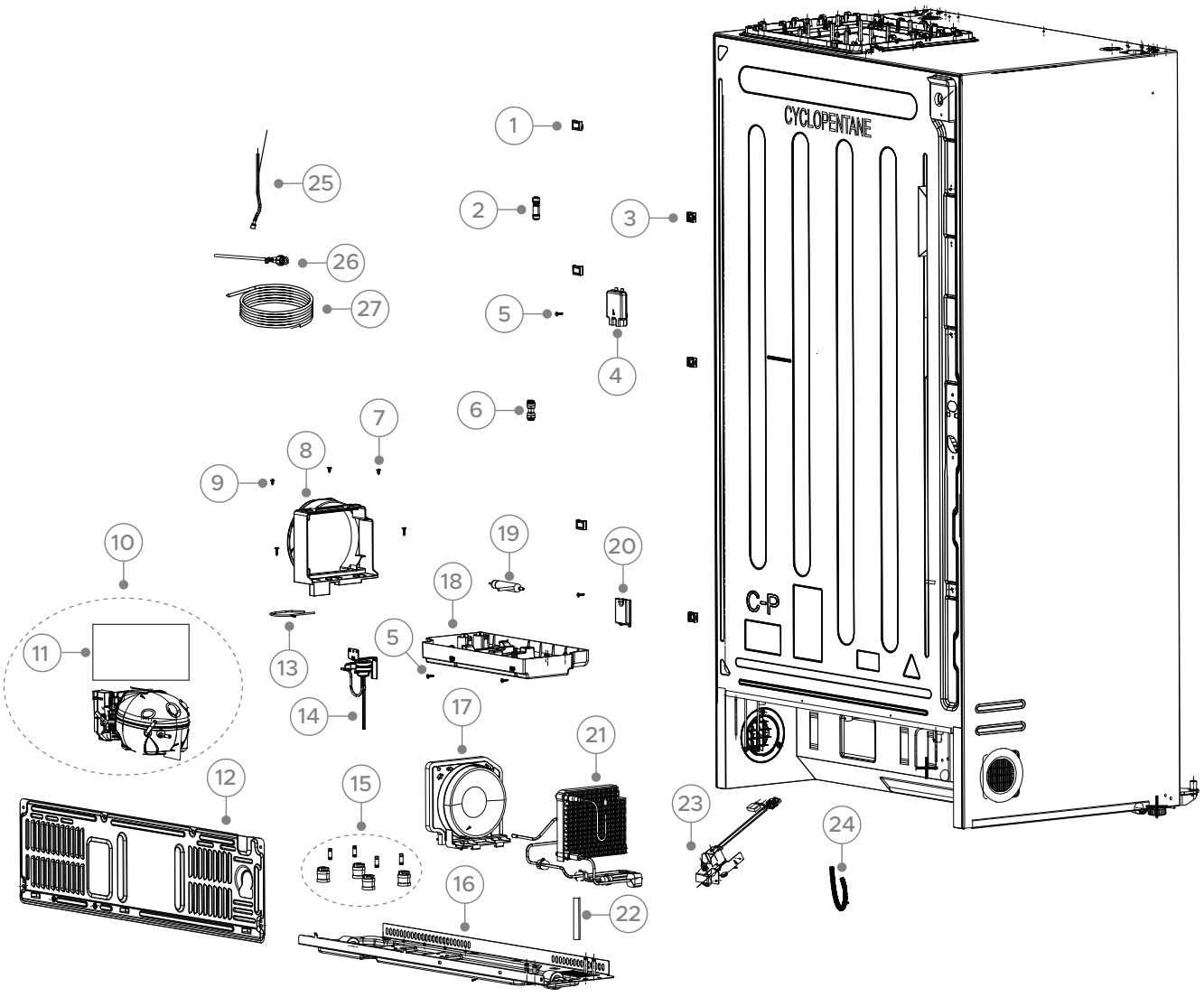

DWG 007548

REAR CABINET COMPONENTS

PART	PART NUMBER	PART DESCRIPTION
1	H0060251570A	SPACER WATER PIPE ABS
2	H0060248197A	PLUG CONNECTOR QUICK
3	H0060251569	SPACER PIPE WATER PP
4	H0060215262	COVER FILTER
5	H0060600097	SCREW
6	H0060236007	CONNECTOR WATER
7	H0060600186	SCREW FLAPPER
8	H0060249387	COVER CONDENSER MICROCHANNEL
9	H0060600097	SCREW
10	H0060707413E	COMPRESSOR VARIABLE 220 2240V
	INCLUDES H0061800484F	BOARD INVERTER
	INCLUDES	COMPRESSOR
11	H0061800484F	BOARD INVERTER
12	H0060850056	COMPRESSOR COVER
13	H0060703766	CONNECTOR SUCTION TUBE
14	H0064001912	VALVE REFRIGERANT
15	H0060705946F	KIT GROMMET AND POST
	INCLUDES	GROMMET X 4
	INCLUDES	POST X 4
16	H0060853327B	PLATE BASE COMPRESSOR
17	H0060852717	FAN CONDENSER
18	H0060249386	TRAY EVAPORATOR
19	H0060702808	DRIER FILTER
20	H0060251755	COVER PIPE COLD WATER
21	H0060705884G	CONDENSER MICROCHANNEL
22	H0060732763	INJECTION TUBE
23	H0064002381A	ISOLATION VALVE
24	H0060163462A	WATER PIPE SPRING II
25	H0060127894E	TUBE MAINS .8MTR 7/16 INCH
26	H0060124530	TUBE VALVE .8MTR 1/2 INCH
27	H0060222973G	TUBE WATER 4M

FISHERPAYKEL.COM

© Fisher & Paykel Appliances 2026. All rights reserved.

The models shown in this guide may not be available in all markets and are subject to change at any time.

The product specifications in this guide apply to the specific products and models described at the date of issue. Under our policy of continuous product improvement, these specifications may change at any time.

For current details about model and specification availability in your country, please go to our website or contact your local Fisher & Paykel dealer.

27023-A 11.26